University Student Union at California State University, Fresno

Clayton Endes – EIT, Cole Martin – EIT, Cam Nguyen, Scott Elia – EIT, Jasvinder Mandair, Mauth Al-Ansiy

California State University, Fresno contacted The FiRM, engineering consultant group in February of 2017 with the expressed intent of developing a new University Student Union. The design engineers would be tasked primarily with compiling a report which would consider various pros and cons incumbent for development for three alternative proposed site plans. The FiRM set out to analyze a number of parameters which could potentially serve as differentiating factors between sites. Ultimately, stakeholder opinion was the prime factor which would lead the design team to select a location near

Approximate Site Location (Google Earth: Landsat Copernicus 2018)

Stakeholder opinion was the prime factor…to select a location

the University's major Business and Science facilities. The design team concluded the analysis phase with the suggestion to proceed with the given location and began looking forward to the design phase.

Geotechnical Considerations

The consultant group's Geotechnical team was tasked with preparing a report detailing soil conditions at the site and determining how this would play a role in the design team's development of plans for a foundation system, which could support the proposed three-story structure. Additionally, a basement area which would house a food court filled with healthy eating options was requested by the client. The healthy food options and various other aspects of the building underscore the University's commitment to provide a welcoming environment for its student population. Because of this proposed basement, the design team would also be required to develop plans for a fourteen-foot retaining wall, which would hold back soil in order to create this space. A retaining wall of this height is inherently expected to experience massive forces, which would seek to

overturn the wall or cause it to slide. In addition to the forces the soil itself produced, the design team was asked to account for seismic excitation of the soil mass in terms of expected loading to the wall in order to provide a design which would hold student lives at the utmost importance. Factors of safety are also applied which magnify these expected loads for design considerations. Sliding of the basement retaining wall was not considered an issue as the wall was braced against the slab and a horizontal girder. This horizontal girder also aided the design team in reducing the amount of concrete required for the strip footing of the retaining wall around the entirety of the building by nearly one half while maintaining appropriate safety factors against overturning of the wall and in regards to bearing capacity of the soil underlying the strip footing. This design, where a horizontal girder is used to provide restorative force against lateral soil pressure, is commonly called a propped cantilever retaining wall. The utilization of such a design must consider the amount of force that would be transmitted to the structure itself. Therefore, it is required that the team's geotechnical and structural divisions maintain appropriate correspondence of expected forces. The forces transferred to the beam and columns were found to be well within acceptable bounds.

This horizontal girder also aided the design team in reducing the amount of concrete required

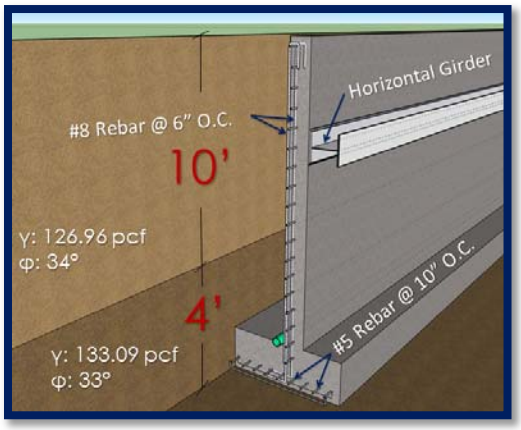

Retaining Wall and Soil Strata Detail

In addition to the retaining wall, the FiRM's Geotechnical team was tasked with designing a foundation system, which would support the weight of the structure. It is important to spread out concentrated loads from columns over a sufficient area in order to inhibit settlement of the building. To this end, 6' x 6' shallow square isolated footings were designed to support the three-story structure with basement. The excavation required to create the basement space for the structure would aid the geotechnical team; the reason for this is that the soil upon which the foundation would rest is already considered to be quite consolidated because of the massive weight of soil, which was previously overlying it. A boring log obtained by the geotechnical team from a nearby site indicated that the first ten feet of soil below the existing ground elevation of roughly 336 feet above sea level had a unit weight of roughly 127 pounds per cubic foot and an internal friction angle of 34°; underlying this soil the remaining soil was found to have a unit weight of about 133 pounds per cubic foot and an internal friction angle of 33°. In order to balance between ease of construction and sustainability, two sizes of isolated spread

footings were utilized to disperse the weight transferred through the columns of the building to the underlying soil. The necessary dimensions of the square footings supporting the outer columns were found to be 6’ x 6’. Inner columns, which were found to support a load of up to nearly 770 kips were dimensioned somewhat larger to provide an appropriate factor of safety to inhibit settlement; the dimensions for these isolated spread footings were set at 8’x 8’. The depth of the footings below grade was set at 4 feet in order that additional shoring or lying back of earth would not be required to meet OSHA requirements. A factor of safety of three was utilized in designing for bearing capacity of the soil and settlement was considered to be acceptable for a thirty-year design period. Steel columns were anchored to the foundation by steel bolts; additionally, steel rebar is integrated into the foundation in order to provide the concrete with adequate reinforcement. Civil Engineers are always quick to remind non-professionals that concrete is incredibly strong in compression but very weak when subjected to tensile forces. Thus, it is

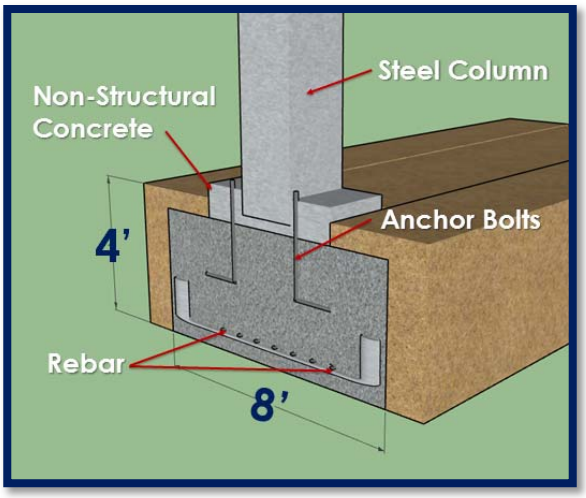

Isolated Spread Footing Detail

The depth of the footings was set at 4 feet in order that additional shoring… would not be required

necessary to provide steel reinforcement in concrete design to provide strength when subjected to tension. Non-structural concrete is utilized to keep the steel column dry and protect against corrosion as it goes below grade before connecting to isolated spread footings.

Design of Structural Components

The FiRM’s Structural design team was tasked with developing a frame which could house all the amenities which were deemed necessary by the Client, California State University, Fresno. The new University Student Union was to be located just south of the existing Satellite Student Union per the alternative selection process. The Client would request that the new, 4-story facility offer 340,000 square feet of internal floor space. The new USU will feature 60,000 square feet of dynamic interchangeable meeting spaces; 60,000 square feet allocated to a food court area including four kitchens, a serving area, and dining space; and a ballroom/conference center capable of accommodating 2,000 participants. Other features not yet mentioned include:

- (6) Conference Rooms seating up to 15 students each for student organizations

- A 10,000 square foot leadership center
- A 1,200 square foot welcome center
- A relaxing, all-year, all-weather, outdoor terrace
- Parking garage for future autonomous vehicle parking

Structurally, the building will be primarily composed of steel frames, with concrete flooring and walls. The design of the new University Student Union will be such that the steel frame is fully capable of supporting gravitational and lateral loadings per applicable standards, specifications, and publications, including ASCE, CBC, AISC, and ACI. Larger column spacing allows for the use of more non-load bearing walls. This way, internal walls can be rearranged to provide the Client with ample opportunity for organization of space to be allocated as necessary for academic and entertainment functions. The implementation of tilt up concrete walls will protect the building and, more importantly, the inhabitants from any fire or weather related hazards.

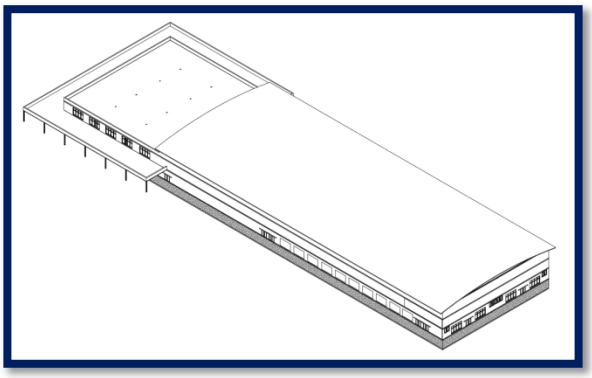

Isometric Aerial View of Building Design

This way, internal walls can be rearranged to provide the Client with space to be allocated

Storm Water Conveyance

Providing a means for storm water to travel away from areas of human activity is a pretty common task for Civil Engineers. Fresno State students would most likely not be happy with the prospect of having to slough through standing water to get to the numerous amenities the Proposed University Student Union was to provide. In addition to

The true challenge of managing storm water was found in attempting to utilize existing infrastructure

the general dismay the public might harbor at getting wet, it is also necessary to implement storm water drainage infrastructure in order to preserve the life of structures and prevent the environment from pollution via contaminated water. Throughout the design of a new University Student Union (USU), on the campus of California State University, Fresno, the true challenge of managing storm water was found in attempting to utilize the existing infrastructure as much as possible in order to alleviate construction cost and design with sustainability in mind. It is necessary throughout the process to bear in mind that the final product of design would be

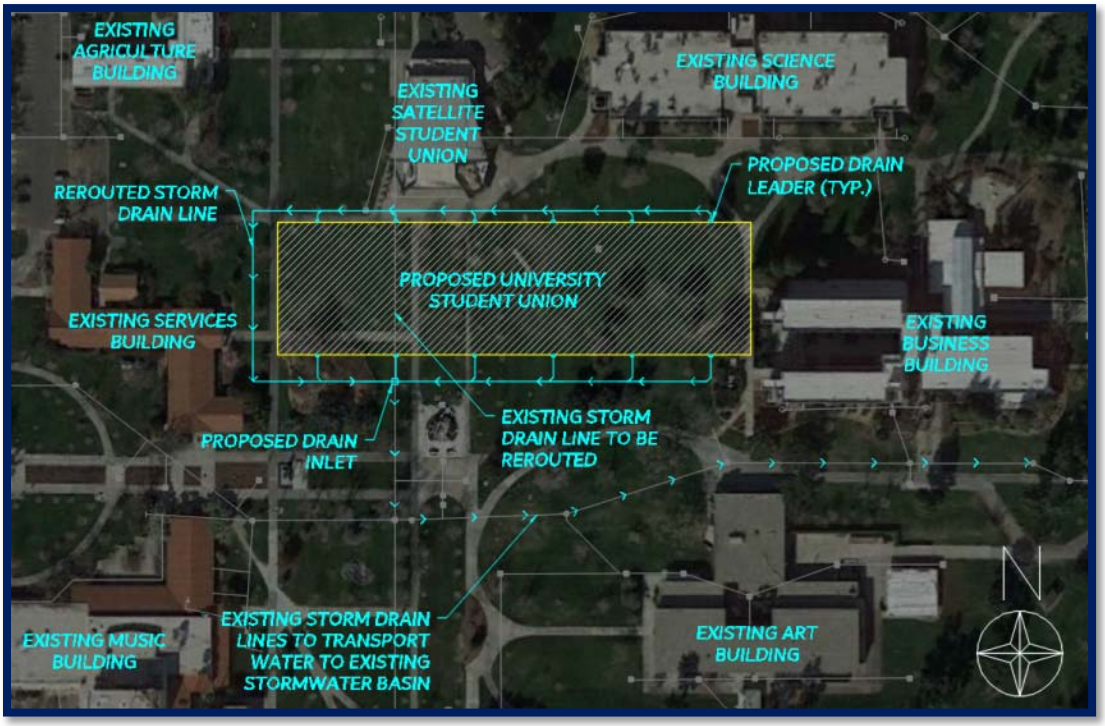

Storm water Collection / Conveyance Path (Google Earth: Landsat Copernicus 2018)

adequate to account for the additional storm runoff created by the construction of the USU. When it comes to the design of the drainage infrastructure, the roof of the proposed USU will have leaders running alongside the building transporting rainfall to the ground.

The finished grade around the structure will be sloped in a way that allows this water along with additional rainfall around the structure to flow into both existing and proposed drain inlets. These drain inlets will collect the storm water while storm drain pipelines located underground will transport this water to an existing storm water basin located east of the campus near the existing Savemart Center.

Two connection points were decided as necessary to account for any line repairs

Water Service to Building

The FiRM is responsible for the water distribution to supply the new Student Union that is being built on Fresno State campus. Prior to the structure being built there are a few things that need to be replaced. At the site of the location there are two existing water and sewer mains that are running right through the placement of the structure. To accommodate for the structure, the pipes will have to be rerouted around the structure. There will be a total of six connection points into the building involving water, sewer, and fire connections. Two connection points were decided as necessary to account for any line repairs that may be needed in the future. Two fire connections are placed in

case of any fire emergency. The pipe that is to be used to deliver water to the building is a 3-inch Schedule-80 PVC which complies with California Building Codes, California Plumbing Codes, and City of Fresno Specs. The existing main that the pipe is being connected from is a 10-inch C900 PVC and the pipe that is being rerouted will also be a C900 PVC.

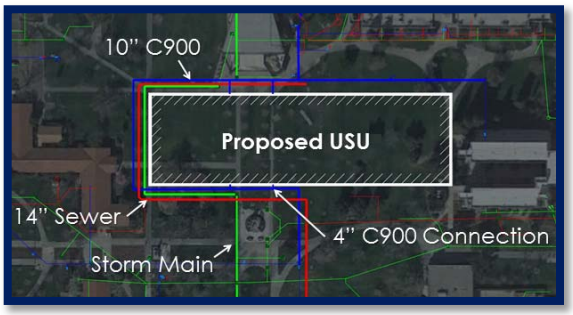

Water Allocation to Building via Existing Lines (Google Earth: Landsat Copernicus 2018)

To design the water distribution system different method approaches were used to determine an adequate pipe diameter. The most effective way was figuring out the total water demand using the fixture method, which requires a total count of fixtures inside the building and use the demand assuming every faucet is running and every toilet is being flushed. From the following information a derived equation was used to determine the diameter that is required to service the building.

Sewer main is also to be rerouted and is subjected to two connection points. The main sewer line is 10-feet below grade and a connection is to be added from the building to the sewer. The sewer pipe is also to be a C900 PVC and will be connected at 2% grade which also complies with City of Fresno standards. It is important for a building to be serviced adequately without constraints. It is generally overlooked of how the pressure is evenly distributed throughout the structure. With thorough calculations water can be evenly distributed with the right fitting. Along with water coming into the building it is also important what goes out of the building and the right size needs to be calculated for sewage to flow away, all while complying with California Building Codes, and California Plumbing Codes.

Transportation Design

The transportation system for the Proposed USU would be required to provide parking and adequate access for bobtail delivery trucks. It is necessary to provide sufficient layer thicknesses for expected traffic for each of these elements while also bearing in mind walkways and ADA requirements.

According to the Office of the President of California State University, Fresno it is a goal of the University to "Implement innovative parking and transportation strategies". Some additional goals detailed

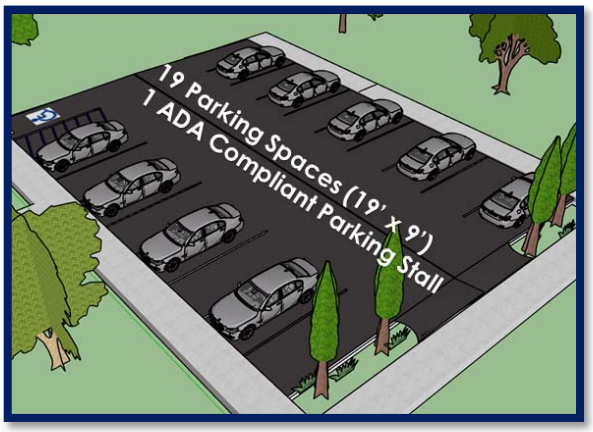

Parking Lot Detail

pedestrian network and connect most campus destinations without crossing vehicles in a safe and convenient way, and make sure that the campus has safe access for parking, emergency vehicles, bicycles, and serves vehicles and pedestrians. As the client mentioned on the Notice to Proceed Letter it is a requirement to have adequate access to the USU without having to drive into pedestrian areas. Parking facilities were provided for 20 autos/light trucks and a loading dock serves a maximum of two delivery trucks with a loading dock to maintain distance from the building itself in order to preserve the retaining wall structure.

Parking facilities were provided… and a loading dock serves… two delivery trucks

Preliminary site investigation covered the entire area around the site and found the closest place for the required 20 stall parking lot, but the stakeholders were a great concern which dictated its placement as well since it is inside the campus. Also loading docks should be located in the designated area so that it does not block the pedestrian areas. A lot of sidewalks have been shifted. However; the parking is located to the north east of the building and also there are available spaces for student to parking in campus. The area of the parking lot and the site is 92,000 SF. The parking has only 20 stalls and includes 1 handicap stall in accordance with the American Disability Act. The parking lot also has a back-up area with clearance of 5 ft. Access of the site is

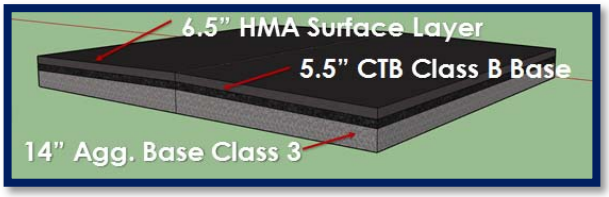

Loading Dock Pavement Detail

from North Maple Avenue. The loading dock is extended from the existing satellite student union loading dock. The loading dock has easy access for trucks going in and out and the turning templates apply to it. Pavement for West San Ramon and North Maple Avenues need to be upgrade since they are in poor condition, so the pavement design is followed by Caltrans method. Aggregate Base Class 3, Cement Treated Base Class-B (CTB) and HMA are used since they are typical and they are cheap and it last for 20 years. Green pavement was used too which is RHMA. Two layers for the parking area and three layers for the truck ramp. The transportation system that the New University Student Union has is important to the project. It provides an adequate access to the site and is sufficient to meet the Client's requirements; also, it has a smooth circulation. The project also includes loading docks to ease access for the delivery trucks and do so safely. Pavement was design too.

Acknowledgements

As students, the Design Team was tasked with the monumental task of the complete design of a University Student Union Center and all constituent elements required to service the building adequately. In order to accomplish this, a number of professionals and faculty members were consulted and aided immensely in realizing this task's successful completion. The FiRM would like to thank the following for their advice and support in closing:

- Dr. Fariborz Tehrani, Ph.D., PE, ENV SP, PMP, SAP – for course instruction throughout semester and provision of template used in drafting this article.
- Neva Popenoe GE, PE @BSK Associates & Dean Ledgerwood PG, CEG @Salem Engineering – for assistance with Geotechnical design considerations.
- Robert S. Parrish SE, PE @Parrish Hansen – for assistance with Structural design considerations.
- Lacey Payne PE & Nick Jacobson PE @ Provost and Pritchard Consulting Group – for assistance with Water Resources design considerations.
- Luis Benavides TE, PE @ JLB Traffic Engineering – for assistance with Transportation design considerations.
- California State University, Fresno faculty advisors: Arezoo Sadrinezhad Ph.D, PE (Geotechnical), Maryam Nazari Ph.D (Structural), Cordie Qualle (Water Resources), Xiaojun Li Ph.D (Transportation) – for their contributions in accordance with respective disciplines

Meet THE FIRM

Clayton Endes, EIT
Project Manager
Geotechnical

Cole Martin, EIT
Secretary
Water Resources

Scott Elia, EIT
Structural

Mauth Al-Ansiy
Transportation

Jasvinder Mandair
Water Resources

Cam Nguyen
Geotechnical